ENGG1300

Notes for HKU · Spring 2024

Author: Jax

Contact: enhanjax@connect.hku.hk

MORE notes on my website!

Made for personal use only. Unmodified re-distribution is allowed. Content for reference only.

1 Vectors

Basics

Vector can be represented by $\vec{F}$ or $\boldsymbol{F}$. The magnitude can be represented by $|F|$ or F.

Unit vectors

They are vectors with magnitude 1. $\hat{A} = \frac{\vec{A}}{|\vec{A}|}$

1.1 Coplanar vectors

Cartesian vector notation

In two dimensions, the Cartesian unit vectors $\boldsymbol{i}, \boldsymbol{j}$ are used to designate the directions of the x and y axes respectively.

$$F = F_x \boldsymbol{i} + F_y \boldsymbol{j}$$

Where $F_{x/y}$ is the x/y component of F. And to find the x/y components we can use trigonometry:

$$F_x = F \cos\theta, \quad F_y = F \sin\theta$$

Where the angle θ is the angle between F and the x-axis.

Resultant force

The resultant force F_R can be found by the sum of the components of F:

$$F_R = \sum F$$

In Cartesian form, it's the same as adding all the terms together: $F_R = (F_{x1} + F_{x2})\boldsymbol{i} + (F_{y1} + F_{y2})\boldsymbol{j}$

Orientation of vector

We always consider the angle between F & F_x. It can be found by $\theta = \tan^{-1} \frac{F_y}{F_x}$.

Magnitude of forces

The magnitude will simply be the square root of the sum of squared components of the force:

$$|F| = \sqrt{F_x^2 + F_y^2 + \dots}$$

Moving vectors by their position vectors

We can move a force F to a point using its position vector r (pointing to their tail), using the following definition:

$$\vec{F} = |F| \times \hat{F} = |F| \times \frac{r}{|r|}$$

The position vectors are in Cartesian form, so the moved vectors will also be in Cartesian form.

Consider the following graph:

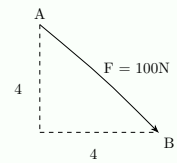

First, we consider r_{AB}. From the graph:

$$\vec{r_{AB}} = 4\boldsymbol{i} + 4\boldsymbol{j}$$

Then, we find the magnitude of r_{AB}:

$$|r_{AB}| = \sqrt{4^2 + 4^2} = 5.65\ldots$$

Finally, we apply our formula for F:

$$\begin{aligned}\vec{F} = |F| \times \frac{r_{AB}}{|r_{AB}|} &= 100 \times (\frac{r_x}{5.65}\boldsymbol{i} + \frac{r_y}{5.65}\boldsymbol{j}) \\ &= 100 \times (\frac{4}{5.65}\boldsymbol{i} + \frac{4}{5.65}\boldsymbol{j}) \\ &= 70.7\boldsymbol{i} + 70.7\boldsymbol{j}N\end{aligned}$$

1.2 Vectors in 3D

The concepts above can be extended to 3D simply by adding another variable to the system.

Coordinate direction angles in 3D

The direction of A is defined by the *coordinate direction angles*: α, β, γ, which are measured between the tail of A and the positive x, y, z axes.

$$\alpha = \cos^{-1}\frac{A_x}{A}, \quad \beta = \cos^{-1}\frac{A_y}{A}, \quad \gamma = \cos^{-1}\frac{A_z}{A}$$

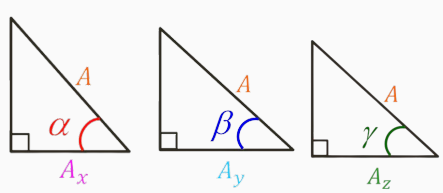

2 Moment of forces

Definition of moment

The moment of a force is a measure of its *tendency* to cause a body to rotate about a specific point. The moment about a point O, when F is applied a distance d from the point is:

$$M_O = F \times d$$

Keep in mind that *positive* moment is *anti-clockwise*.

2.1 Coplanar / 2D moment

Resultant moments

The resultant moment is the **sum** of all moments present on the point, given by:

$$M_R = \sum M_O$$

2.1.1 The moment of a non-linearly attached force

One simple way is to find the *components* of the force, and sum their individual moments together. The following is a simple example:

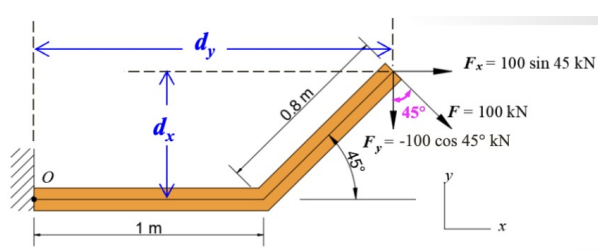

After finding the component forces of F, we can deduce the resultant moment to be:

$$\begin{aligned} M_O &= F_x \times 0.8 \sin 45\,\text{deg} + F_y \times (1 + 0.8 \cos 45\,\text{deg}) \\ &= -150.7 kNm \end{aligned}$$

2.2 Non-coplanar / 3D moment

Moments in a 3D system

Consider position vector $\vec{r}$ drawn from O to any point on the *line of action* of F. The moment can hence be given by:

$$M_O = r \times F$$

Finding the moment via cross products Cartesian vectors

The cross product C given by A and B is:

$$A \times B = \begin{vmatrix} i & j & k \\ A_x & A_y & A_z \\ B_x & B_y & B_z \end{vmatrix} = C$$

The cross-product for vectors going in the *same direction* is 0. (i.e. $n\boldsymbol{k} \times m\boldsymbol{k} = 0$)

Resultant moments

The resultant moment is simply the **sum** of *couple moments* and moments of forces:

$$(M_R)_O = \sum M_O + \sum M$$

You can interpret $(M_R)_O$ as the resultant moment about point O.

2.3 Couple moments

Couples are *two parallel forces* that have the same magnitude but have *opposite directions*, separated by a *perpendicular distance d*. The magnitude of the moment is given by:

$$M = Fd$$

Notice that there's no point mentioned so far. For couple moment, it is **always the same about any point**. Let's assume for any point O (refer to graph), the moment is:

$$\begin{aligned} M_O &= r_B \times F + r_A \times -F \\ &= (r_B - r_A) \times F \\ &= r \times F \quad \text{which is independent of } O \end{aligned}$$

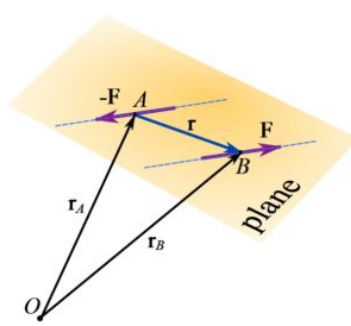

Hence, we can say that couple moments are **free vectors**.

3 Equilibrium of rigid bodies

Conditions for rigid body equilibriums

A rigid body is in equilibrium if:

$$\sum F_x = 0, \quad \sum F_y = 0, \quad \sum M_O = 0$$

Where O is any point.

3.1 Free body diagrams

The procedure to draw a free body diagram (FBD) is as follows:

1. Draw the outlined shape of the rigid body.
2. Show all forces acting on the rigid body. (Weight, reaction, friction, etc.)
3. Identification and labelling.

3.2 Support reactions

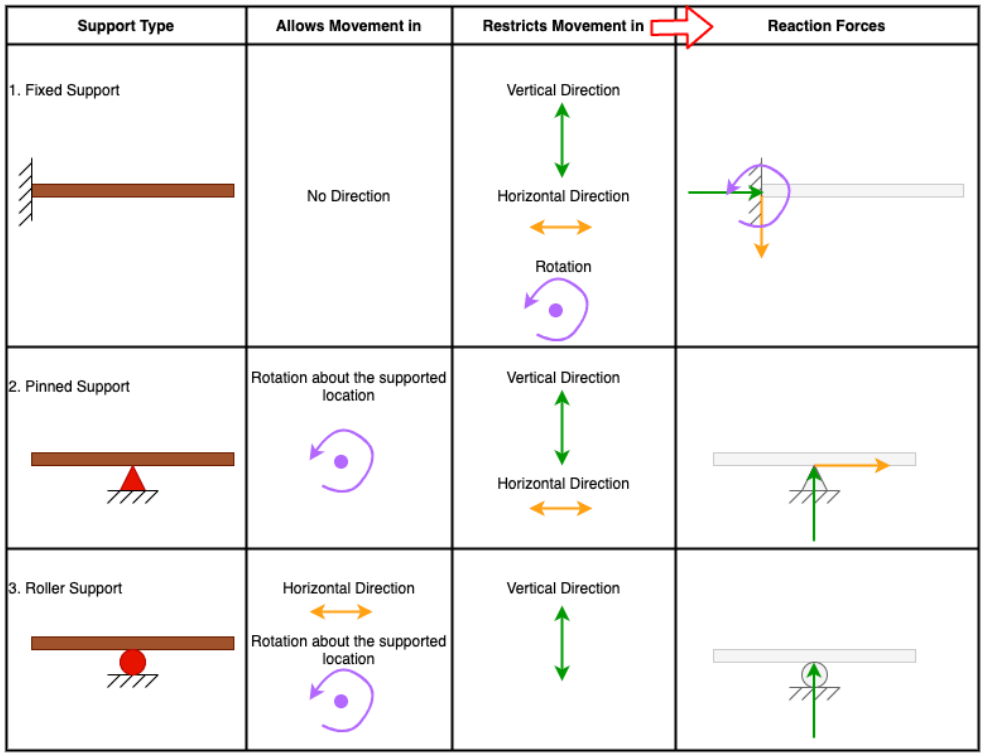

Source: https://clearcalcs.com/blog/support-connection-types

This will also be useful in section "Statics and restraints".

3.3 Finding forces in equilibrium systems - an example

Consider this equilibrium system. Let's find the reaction at supports A and B. First, we draw it's FBD as according to support reactions:

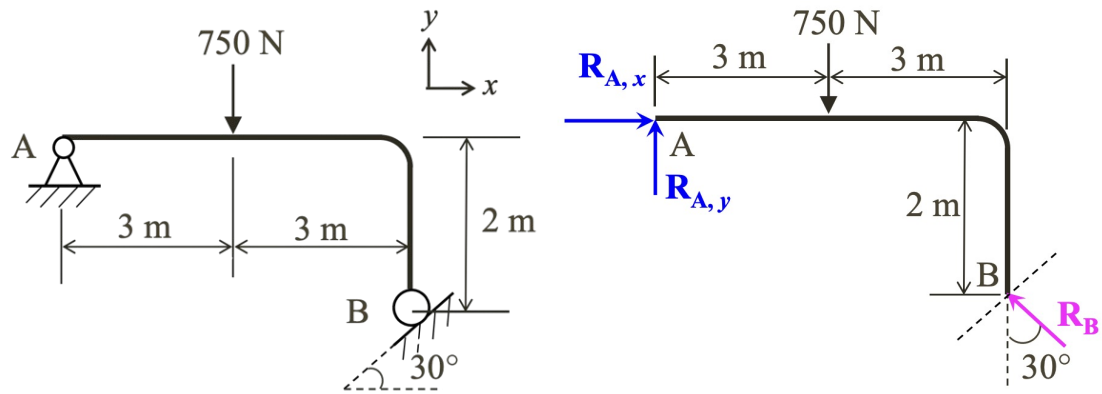

Then, we start by applying equilibrium equations. We consider the moment about A to find R_B, then find the component support forces at A:

$$\begin{aligned}
\sum M_A &= 0 \\
6R_{Bx} &= 2R_{By} + 3 \times 750 \\
6R_B \sin 60\,\text{deg} &= 2R_B \cos 60\,\text{deg} + 3 \times 750 \\
R_B &= 536.2N
\end{aligned}$$

We know at any point the component resultant forces must be 0, so:

$$\begin{aligned}
\sum F_x &= 0 \\
R_{Ax} &= 536.2 \cos 60\,\text{deg} \\
R_{Ax} &= 268.1N \\
\\
R_{Ay} &= 750 - 536.2 \sin 60\,\text{deg} \\
R_{Ay} &= 285.6N
\end{aligned}$$

4 Axially loaded members

4.1 Stress and strain

Axial stress

Axial stress is the stress that is *parallel* to the cross-sectional area of the member. It is given by:

$$\sigma = \frac{F}{A} \quad (Nm^{-2})$$

Where F is the force applied, and A is the cross-sectional area of the member. Note that $1Pa = 1Nm^{-2}$.

Axial strain

Axial strain is the ratio of the change in length to the original length of the member. It is given by:

$$\epsilon = \frac{\Delta L}{L} \quad \text{(Ratio)}$$

Where ΔL is the change in length, and L is the original length of the member.

4.1.1 Materials

Strength

Material strength is defined as the maximum stress that can be resisted by the material.

Young's Modulus

Young's modulus is the ratio of stress to strain, given by:

$$E = \frac{\sigma}{\epsilon} \quad (Pa)$$

Poisson's ratio

Poisson's ratio is the ratio of lateral strain ϵ_l to axial strain ϵ, given by:

$$\nu = \frac{\epsilon_l}{\epsilon} \quad \text{(Ratio)}$$

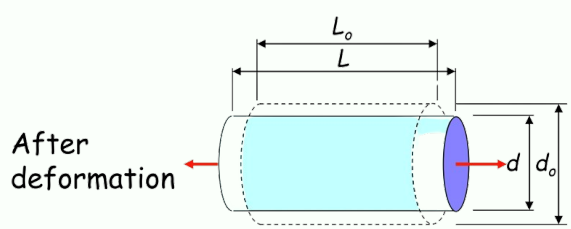

The lateral strain ϵ_l is $\frac{\Delta d}{d_0}$.

4.1.2 Hydrostatic pressure

Hydrostatic/water pressure

The water pressure acting on any surface is *always perpendicular* to the surface, and the water pressure in *any directions is the same*. The pressure is given by:

$$p = \rho g h \quad (Pa)$$

Where ρ is the density of water, and h is the depth of the water.

Water pipe

1. **Internal pressure** refers to the pressure inside the pipe.
2. **Internal force** refers to the pressure's effect onto a side of the pipe.
3. **Internal stress** refers to the stress caused by the internal force, acting along the *circumferential direction* of the pipe. This is also called the **hoop stress**.

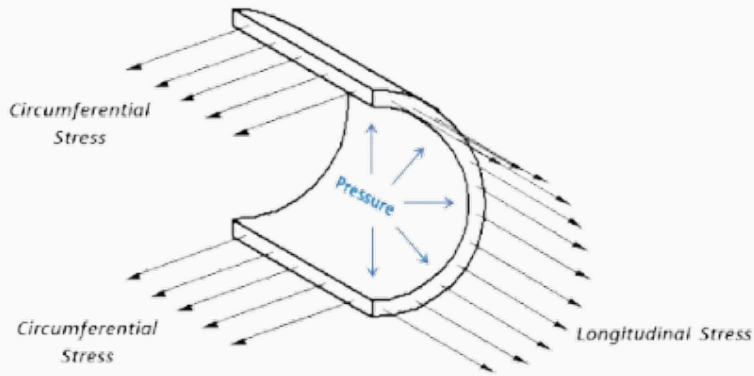

5 Statics and restraints

5.1 Statics

Static equilibrium

System in **Static equilibrium** experiences no acceleration when loads are applied to it.

Supports and reaction forces

Support type	Restricted movement and reaction forces	Shape
Fixed	x, y, r (moment)	Flat
Pinned	x, y	Triangle
Roller	y	Circle

Refer to section "support reactions" for details.

Static conditions

1. Insufficient restraints → **non-static system** (contains mechanisms)
2. Sufficient restraints → **static system**

Static systems can be further classified into *statically determinate* and *statically indeterminate*.

Restraints	**Support reactions**	**Number of unknowns**	System is statically
Just enough	All solvable	no. of equations	**determinate**
More than enough	Unsolvable	> no. of equations	**indeterminate**

If there are **3 reaction forces**, the system is statically determinate. (3 equilibriums)

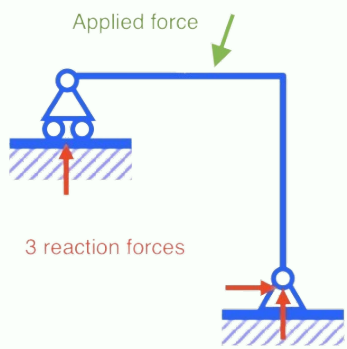

Degree of indeterminacy

The degree of indeterminacy(or redundancies) is simply $R - 3$ where R is the number of reaction forces.

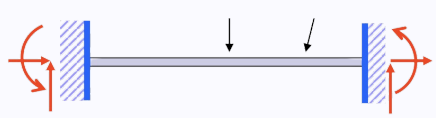

The number of redundancies is 3.

5.2 Loading

Types of loading

1. **Concentrated load** is a force applied at a single point. (N)
2. **Distributed load** is a force applied over a length. (N/m)

Resultant force and moment for distributed load

Intuitively, the resultant force is to simply convert the units to N by $F \times area$.

- Unifrom $\rightarrow F = wl$
- Triangular $\rightarrow F = \frac{1}{2}wl$

For $M = Fd$, d is given by the distance from the **origin to the centroid** of the distributed load. The following gives the centroid for some common loads:

- Uniform $\rightarrow$ **middle** of the load.
- Trianglular $\rightarrow$ **one third from the base** of the load.

5.3 Pin-Joined Trusses

A **truss** is a structure that consists of *straight members* connected at their ends by *pin joints*.

5.3.1 Types of trusses

A quadrangular truss is a mechanism, and a triangular truss is a statically determinate structure.

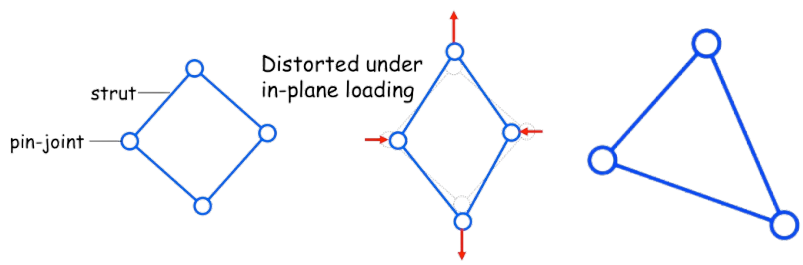

5.3.2 Statically determinate trusses

To construct an *internally* statically determinate truss, we begin with a triangular pin-jointed truss and then successively adding two new members with a new joint.

We say the truss is only *internally* statically determinate because the external reactions are not yet known.

5.3.3 Analysing trusses

We make the following assumptions when analysing trusses:

1. The loads are *applied* at the joints only.
2. The members experience *little deformation*.
3. The members are *connected* connected with *frictionless pins*.

Internal vs. External

- Forces acting on the members $\rightarrow$ **Internal forces**
- Forces acting on joints $\rightarrow$ **External forces**

Method of joints

To find the forces on the members of a truss, refer to the following steps:

1. Isolate a **solvable joint**.
2. Draw the FBD of the solvable joint by **replacing members with forces**.
3. Use $\sum F_x = 0 = \sum F_y$ to solve for the unknown forces.

Keep in mind that *the joint must be in equilibrium.* That is, the **external forces** are balanced by **internal forces**.

Consider the following truss system. The only solvable join is joint B. After drawing the FBD on joint B, we can solve for the forces on the members.

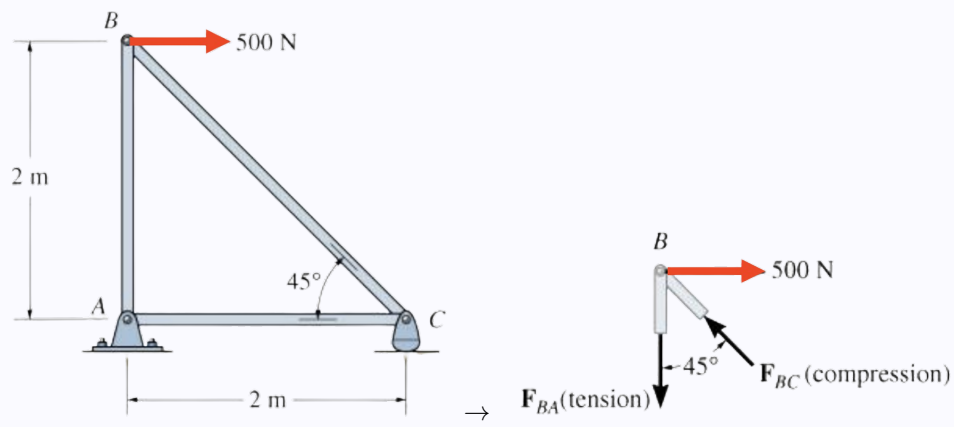

$$500 = F_{BC} \sin 45°$$
$$F_{BC} = 707.1N$$

Repeating these steps on the other joints will give us the forces on the members.

Method of sections

We cam divide the truss into sections by cutting through the selected members and analyzing the section as a rigid body.

This is used to solve for the unknown forces within specific members of a truss *without solving for them all.*

The *method of joints* is simply a special case of the *method of sections.*

Tension vs. compression

By convention, we always draw:

- Tension forces → **pointing away** from the joint
- Compression forces → **pointing towards** the joint

Zero-force members

The following are zero-force members given that **no external load or support reaction is applied to the joint**.

- **2 non-collinear members** of a two-member-joint
- **3rd member** of a three-member-joint, where the other two are collinear.

Removing zero-force members allows us to simplify the truss.

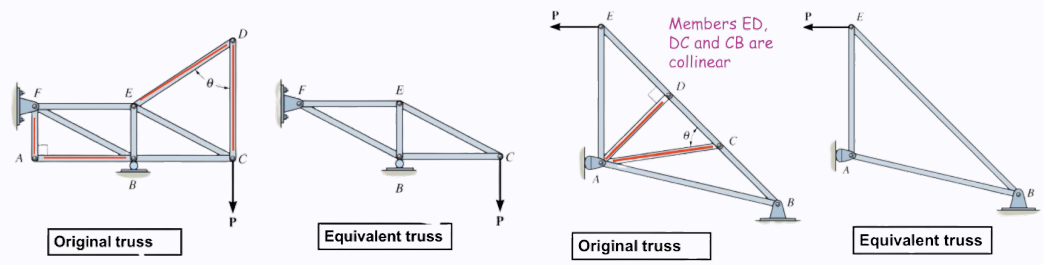

5.3.4 Simple example

...

5.4 Cable structures